Piezo-sounder Driver with Multi-mode charge pump

FEATURES

- Supply Voltage Range from 1.3 V to 5.5V
- 18V_{PP} Output from a 1.3V Supply
- Integrated Boost Converter Generates up to 16.5V Supply
- Input Signal 20Hz to 10kHz
- No Voltage Cross Output at Shutdown Mode
- Low Current Consumption
- Automatic Standby and Wake-up Control
- Available QFN16 and QFN12 package
- Short protection current about 100mA
- OTP feature

APPLICATIONS

- Health Care Systems
- Home Appliances
- Wrist Watches
- Handheld GPS devices
- PDAs
- Security Devices
- Alarm Clocks

DESCRIPTION

The SD116 is a switching driver with multi-mode charge pump for piezo-sounder. It can drive outputs up to 18Vpp from 1.3V supply. For adjusting the piezoelectric sounder sound volume, the charge pump can operate in either of a 1x, 2x or 3x mode. Because SD116 has the shutdown function, it is suitable for the battery application.

SD116 includes built-in automatic shutdown and wake up that guarantees longer battery life. SD116 features thermal shutdown and output short protection circuits.

PACKAGE (QFN16 AND QFN12)

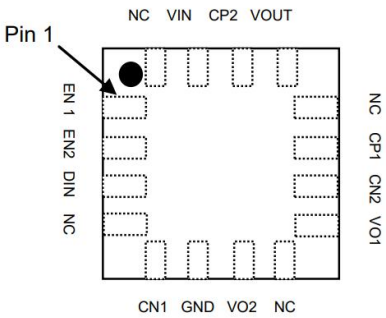

QFN3*3_16

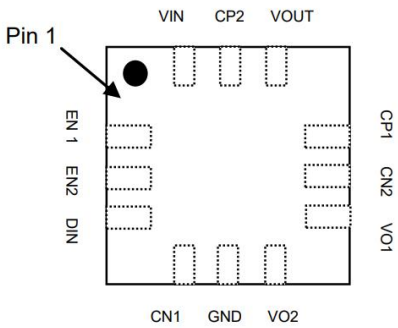

QFN3*3_12

ORDING INFORMATION

Part Number	Package Type	Package Qty	Op Temp(°C)	Mark
SD116	QFN16	7000	-40~85	SD116 XXX
SD116	QFN12	5000	-40~85	SD116 XXX

Piezo-sounder Driver with Multi-mode charge pump

PINOUT

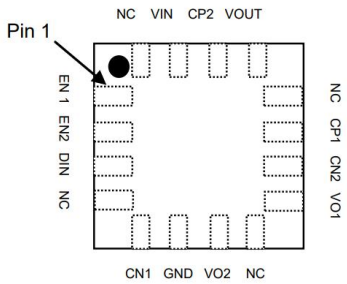

QFN3*3_16

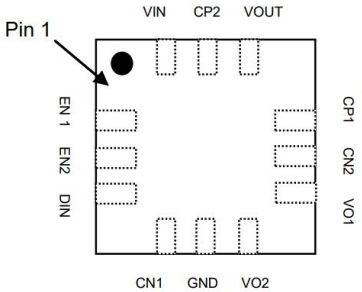

QFN3*3_12

PIN FUNCTIONS（QFN16）

Pin Number		Pin Name	Type	Function
QFN3*3_16	QFN3*3_12			
1	1	EN1	I	Charge pump mode select 1
2	2	EN2	I	Charge pump mode select 2
3	3	DIN	I	Signal Input
4		NC	—	No Connection
5	4	CN1	I	Capacitor 1 Negative Terminal
6	5	GND	P	Ground
7	6	VO2	O	Positive Output
8		NC	—	No Connection
9	7	VO1	O	Negative Output
10	8	CN2	I	Capacitor 2 Negative Terminal
11	9	CP1	I	Capacitor 1 Positive Terminal
12		NC	—	No Connection
13	10	VOUT	O	Boost Output
14	11	CP2	I	Capacitor 2 Positive Terminal
15	12	VIN	P	Power supply
16		NC	—	No Connection

(1)G = Ground, I = Input, O = Output, P = Power

ABSOLUTE MAXIMUM RATINGS (NOTE 1)

(@ T_A = +25°C, unless otherwise specified.)

Symbol	Characteristics	Value	Unit
VIN	Supply Voltage	-0.3 to 6.0	V
VOUT	Output Voltage	-0.3 to 16.5	V
VEN1	EN1 Voltage	-0.3 to V_{IN} +0.3	V
TA	Operating Free-Air Temperature Range	-40 to +85	°C
T_J	Operating Junction Temperature Range	-40 to +150	°C
TSTG	Storage Temperature Range	-65 to +150	°C

Note: 1. Stresses beyond those listed under Absolute Maximum Ratings may cause permanent damage to the device. These are stress ratings only, and functional operation of the device at these or any other conditions beyond those indicated under Recommended Operating Conditions is not implied. Exposure to absolute-maximum-rated conditions for extended periods may affect device reliability.

RECOMMENDED OPERATING CONDITIONS

(@ T_A = +25°C, unless otherwise specified.)

Symbol	Characteristics	Conditions	Min	Max	Unit
VIN	Supply Voltage	1x Mode, 2x Mode,3x Mode	1.3	5.5	V

ESD Susceptibility

HBM	Human Body Model	8	kV
MM	Machine Model	600	V
CDM	Charged Device Model	1	kV

THERMAL INFORMATION

Parameter	Symbol	Package	Maximum	Unit
Thermal Resistance (Junction to Ambient)	θ_{JA}	QFN16	35	°C/W
Thermal Resistance (Junction to Case)	θ_{JC}	QFN16	14	°C/W
Thermal Resistance (Junction to Ambient)	θ_{JA}	QFN12L	68	°C/W
Thermal Resistance (Junction to Case)	θ_{JC}	QFN12L	25	°C/W

ELECTRICAL CHARACTERISTICS

(@T_A = +25°C, V_{IN} = 3.0V, C_{PIEZO} = 30nF, f_{DIN} = 4 kHz, unless otherwise specified.)

Parameter	Symbol	Conditions	Min	Typ	Max	Unit
Output Voltage	VOUT1	1x Mode	1.2	—	3	V
	VOUT2	2x Mode	5.2	—	6	V
	VOUT3	3x Mode (Note 2)	7.2	—	9.1	V
Operating Current 1	IDD11	1x Mode, C_{PIEZO} = No Load	—	105	—	µA
	IDD12	2x Mode, C_{PIEZO} = No Load	—	249	—	µA
	IDD13	3x Mode, C_{PIEZO} = No Load	—	354	—	µA
Operating Current 2	IDD21	1x Mode, Single-ended application	—	0.38	—	mA
	IDD22	2x Mode, Single-ended application	—	1.33	—	mA
	IDD23	3x Mode, Single-ended application	—	2.8	—	mA
Operating Current 3	IDD31	1x Mode, Differential application	—	1.1	—	mA
	IDD32	2x Mode, Differential application	—	4.46	—	mA
	IDD33	3x Mode, Differential application	—	9.83	—	mA
Shutdown Current	ISD	DIN = 0V	—	—	1	µA
Input Frequency	fIN	Rectangular pulse	—	3	—	kHz
Oscillating Frequency	f_{OSC}	—	—	200	—	kHz
VOUT Start Delay Time	t_{ON1}	1x Mode, From DIN signal High to 90% V_{OUT} steady state	—	95	—	µs
	t_{ON2}	2x Mode, From DIN signal High to 90% V_{OUT} steady state	—	310	—	µs
	t_{ON3}	3 x Mode From DIN signal High to 90% V_{OUT} steady state	—	390	—	µs
Shutdown Delay Time	t_{OFF}	DIN = H- > L	—	42	—	ms
Output Short-Circuit Current	ISC	—	—	40	—	mA
Control Terminal Voltage H	VIH	EN1, EN2, DIN pins	0.8*V_{IN}	—	VIN	V
Control Terminal Voltage L	VIL	EN1, EN2,DIN pins	0	—	0.2*V_{IN}	V
Control Terminal Current 1	IIH1	DIN = 3V	—	1.7	—	µA
Control Terminal Current 2	IIH2	V_{EN1} = 3V, DIN = 3V	—	1.7	—	µA
Control Terminal Current 3	IIH3	V_{EN1} = 3V, DIN = 0V	—	—	1	µA

CHARGE PUMP MODE SETTING

DIN	EN1	EN2	MODE
0	--	--	Shutdown Mode
1	0	0	Shutdown Mode
1	0	1	1x Mode
1	1	0	2x Mode
1	1	1	3x Mode

TIMING CHART

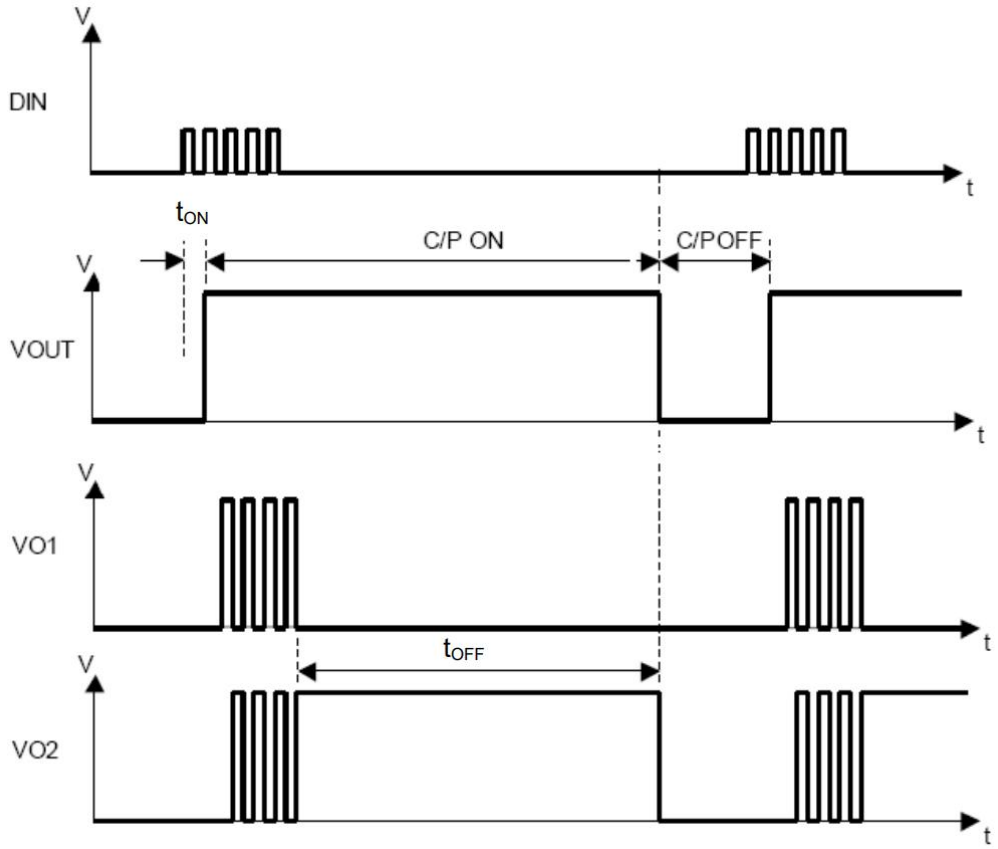

APPLICATION CIRCUIT

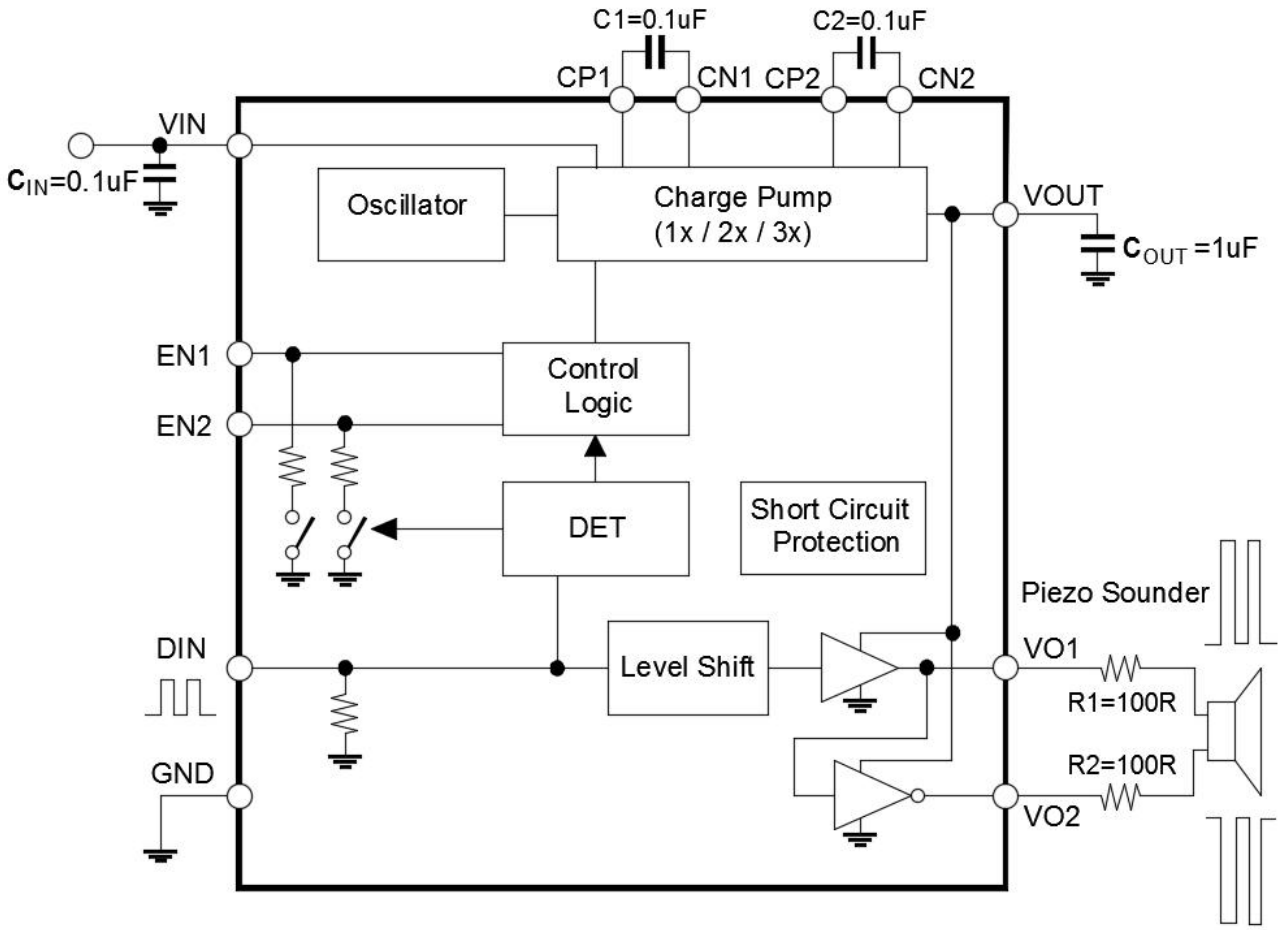

PACKAGE INFORMATION

PACKAGE INFORMATION(QFN3*3_16)

尺寸 / 标注	最小	标准	最大	尺寸 / 标注	最小	标准	最大
A	0.70	0.75	0.80	D1	1.60	1.70	1.80
A1	0.00	—	0.05	E1	1.60	1.70	1.80
A3	0.203REF			e	0.50TYP		
b	0.20	0.25	0.30	K	0.20	-	-
D	2.90	3.00	3.10	L	0.30	0.40	0.50
E	2.90	3.00	3.10				

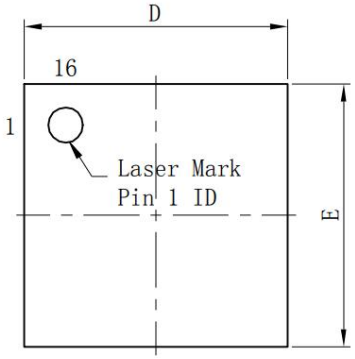

Top View

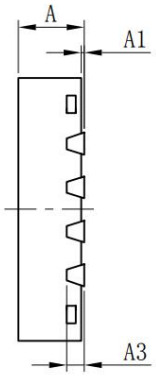

Side View

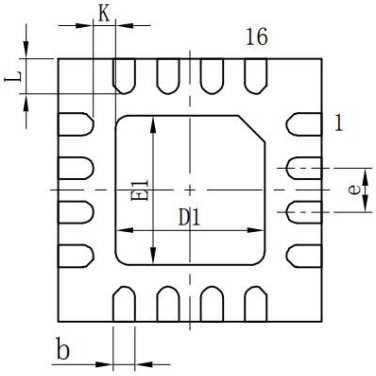

Bottom View

PACKAGE INFORMATION(QFN3*3_12)

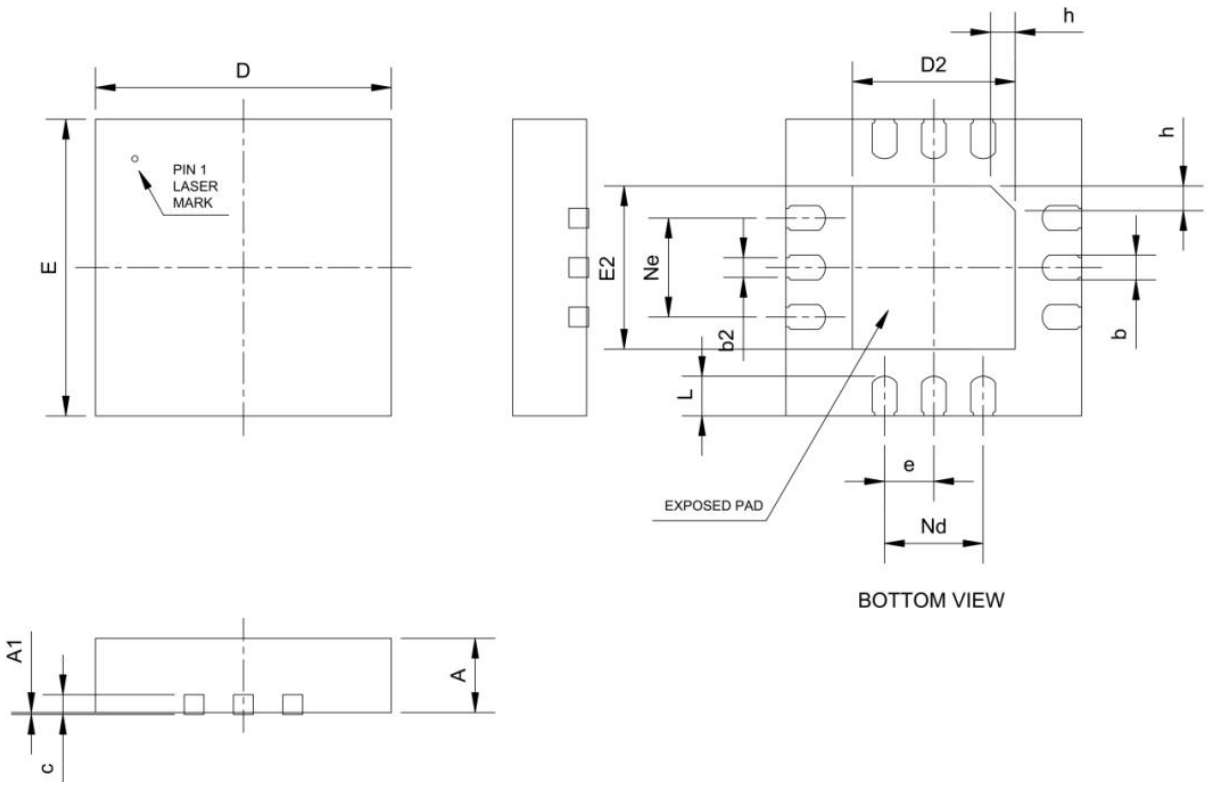

Symbol	Min	Nom	Max	Unit
PACKAGE DIMENSIONS				
A	0.70	0.75	0.80	mm
A1	---	0.02	0.05	mm
b	0.20	0.25	0.30	mm
b2	0.15	0.20	0.25	mm
c	0.18	0.20	0.25	mm
D	2.90	3.00	3.10	mm
D2 (Exposed.pad)	1.55	1.65	1.75	mm
e	0.50 BSC			mm
Ne	1.00 BSC			mm
Nd	1.00 BSC			mm
E	2.90	3.00	3.10	mm
E2 (Exposed.pad)	1.55	1.65	1.75	mm
L	0.35	0.40	0.45	mm
h	0.20	0.25	0.30	mm